Truck and Pony Trailer

Last Modified: May 5, 2025

Part 1 - Dimension Limits

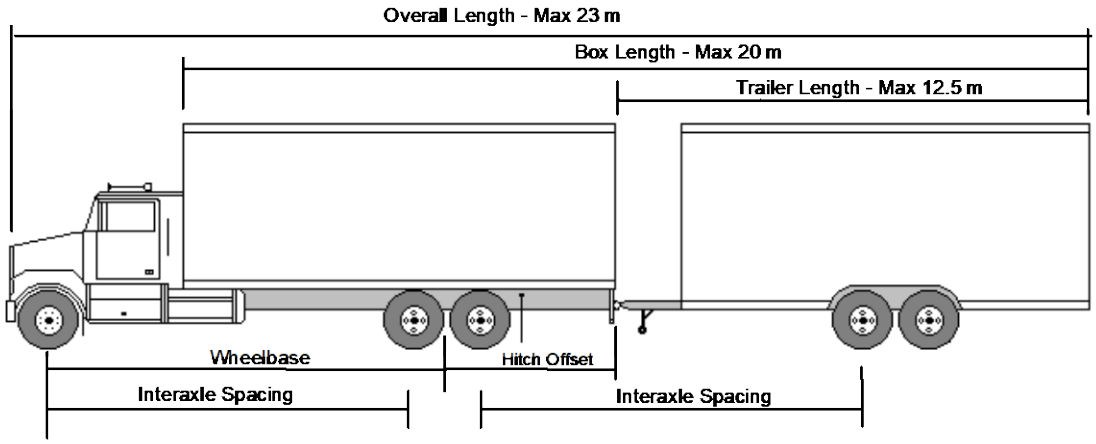

DIMENSION	LIMIT
Overall Length	Maximum 23.0 m
Overall Width	Maximum 2.6 m
Overall Height	Maximum 4.15 m
Box Length	Maximum 20.0 m
Truck	
Length	Maximum 12.5 m
Wheelbase	Not controlled
Effective rear overhang	Maximum 4.0 m
Hitch offset	Maximum 1.8 m
Pony Trailer	
Length	Maximum 12.5 m
Wheelbase *	Minimum 6.25 m
Track Width *	Minimum 2.5 m/Maximum 2.6 m
Effective Rear Overhang	Maximum 4.0 m
Axle Spreads	
Tandem axle	Minimum 1.0 m / Maximum 1.85 m
Tridem axle	Minimum 2.4 m / Maximum 2.5 m
Interaxle Spacings	
Single to single, tandem, or tridem	Minimum 3.0 m
Tandem to tandem	Minimum 5.0 m
Tandem to tridem	Minimum 5.5 m

***** Limits not applicable to pony trailers with Gross Vehicle Weight Rating of less than 10 000 kg.

Part 2 - Weight Limits

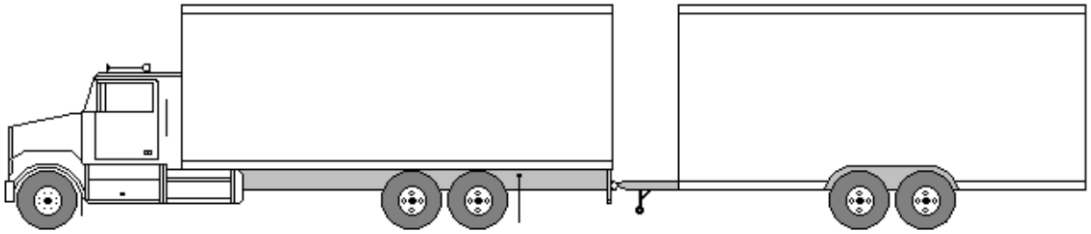

WEIGHT	LIMIT
Axle Weights:	
Steering Axle	Maximum 7300 kg
Carrying Axles:	
Single Axle	
Single tires	Maximum 7300 kg
Wide-base single tires	Maximum 9100 kg
Dual tires	Maximum 9100 kg
Tandem Axle	
Single tires	Maximum 13,600 kg
Wide-base single tires	Maximum 17,000 kg
Dual tires	Maximum 17,000 kg
Tridem Axle	
Single tires	Maximum 19,000 kg
Dual and wide base single tires with axle spread 2.4 m to less than 2.5 m	Maximum 21,000 kg **
Gross Vehicle Weight Limits	
See Weight Calculator https://www.alberta.ca/commercial-vehicle-weight-and-dimensions-regulations.aspx	Cannot exceed the sum of the maximum legal axle weights and is subject to minimum interaxle spacing.

** The maximum spread permitted for a tridem axle group on a pony trailer is 2.5 m.

All axle weights are subject to minimum tire size. The maximum weight per tire shall not exceed the lesser of the tire manufacturer's weight rating or the width of the tire stamped on the sidewall multiplied by 10 kg/mm.